Polybutene
Piping Systems Association

Polybutylene Piping Systems

Answers to Frequently Asked Questions

www.pbpsa.com

Answers to Frequently Asked Questions

The Polybutene Piping Systems Association (PBPSA) provides answers to many of the questions we receive regarding Polybutylene (Polybutene-1, PB-1) and includes expert assessments from independent engineering and standards authorities.

Polybutylene was introduced to the European market in the mid 1960's and has a successful long-term record of service in pressurised hot and cold water systems. As a result, Polybutylene is widely recognised by manufacturers and installers of piping systems in Europe and Asia as the material of choice for these systems.

In direct contrast to over 40 years of performance excellence in Europe, Polybutylene (or Polybutene) piping was the subject of a lawsuit in the U.S.A in the 1990's.

> "How can Polybutylene piping systems have a record for long-term reliability and high performance in one advanced market, and be subject to legal action for systems failures in another?"

What happened in the US legal case?

There was a US class action lawsuit in the mid 1990's alleging defects in "Polybutylene plumbing systems."

- The stated "Polybutylene plumbing systems" mentioned in the US legal case were pipes made from Polybutylene joined to fittings made from acetal resin.
- Premature failures were caused by the use of acetal fittings and poor joint assembly techniques.
- Acetal is not suitable for use in the transportation of hot water with a high chlorine concentration, Polybutylene however, performs well under similar conditions.
- From the legal case, and shown on p.6 are examples of fittings in a variety of materials that were rolled into the complaint against the so-called "Polybutylene plumbing systems."

  IMPORTANT: In Europe and Asia, superior jointing standards for Polybutylene piping systems are achieved by both manufacturers and installers. Whether the jointing process in the manufacture of fittings (Polybutylene-to-Polybutylene, or Polybutylene-to-metal), jointing of pre-fabricated sections in the workshop, or jointing made on site – there are four possibilities for joining Polybutylene pipes with fittings. These are: compression, socket fusion, electro fusion, and push-fit plumbing systems. The combination of materials and jointing method must be correct to make a sustainable linkage.

Are Polybutylene pipes banned in the US?

- No, there is no US ban on Polybutylene for piping systems but PBPSA members have taken the decision not to sell Polybutylene pipes in North America in view of the outcome of the previous US litigation process.

What is important to know about Polybutylene piping systems?

Reputation and versatility

- Polybutylene (PB-1) pipe is widely used in plumbing applications in Europe and Asia, and conforms to European standards and homologation/qualification requirements.
- Polybutylene pipes can be assembled using well-known pipe jointing methods, including push-fit and a variety of welding techniques, e.g. socket-, butt- and electro fusion. (see p.8)
- An independent inspection of Polybutylene pipes installed in an apartment complex in the US showed no evidence of material defects or degradation after 18 years of service*

  *"Assessment of Polybutylene Plumbing Installation after 18 Years of Service", Dale Edwards and Donald Duvall, Proceedings of the Society of Plastics Engineers Annual Technical Conference, Cincinnati, OH, April 22-24, 2013. (Appendix I - see p.11)

Customer base and track record

- Manufacturers of Polybutylene piping systems are world-class pipe converters who produce and sell Polybutylene pipes and plumbing globally (outside of NA).
- Polybutylene pipes are installed in residential and public/commercial buildings, including many well known venues such as the Royal Albert Hall in London. (see p.10)

Manufacturing and quality

- Polybutylene is produced at a state-of-the art manufacturing facility in The Netherlands, with strict adherence to ISO standards and quality procedures.
- Every batch of Polybutylene produced is traceable and conforms to pre-defined product specifications.
- Polybutylene is recognised in international plastic pipe standards, e.g. EN ISO 15876, ISO 12230, DIN 16968 and DIN 16969. (see www.pbpsa.com for comprehensive listing)
- Polybutylene pipe is certified for water quality by TZW (Technologiezentrum Wasser, Germany) and WRAS (Water Regulations Advisory Scheme, UK).

Performance testing – Long term service

- Long-term ISO 9080 tests performed on Polybutylene pipes project service lifetimes of 50 years or more. Reference curves for homopolymer and copolymer Polybutylene grades are available upon request.
- ISO 9080 tests are carried out according to international protocols by independent and accredited test agencies such as EXOVA.
- Chlorine Resistance: Polybutylene pipes are expected to have service lifetimes of 25 years when exposed to water containing 2 ppm chlorine at 20°C. Moreover Polybutylene pipe has been shown to perform for >1,000 hours in chlorine content of 30 ppm at 30 C/6 bar (Test Report-No. PB 1087C, Infraserv Höchst Technik, 2004).

What are the key benefits of Polybutylene piping systems?

Material benefits

- Polybutylene (PB-1) is inherently flexible, strong, resilient and light in weight, with a density similar to water of 0.930 g/ml^3.
- Polybutylene pipes and fittings are odourless and tasteless and meet 'contact with food' approvals. They are therefore ideal for use in drinking water applications.

Installation advantages

- Most Polybutylene pipework can be supplied in coiled lengths of up to 100 metres, depending on diameter, thus long pipe runs can be installed without the need for straight connectors.
- Pipework can be installed in suspended floors from below before ceilings are fitted.
- Supplied coils are easily handled and uncoiled into straight lengths.
- No solders, fluxes or greases are used with Polybutylene piping systems.
- Polybutylene systems' suppliers provide complete systems including pipes, fittings and accessories thus performance and jointing integrity are guaranteed when used as instructed.
- Pipes up to 22mm in diameter can be cabled around obstructions and through joists – thus fewer joints are necessary than with traditional materials.
- No bending tools are required - in fact, a complete pipework installation can be completed requiring only a pair of pipe cutters.
- No naked flame heating is required to make a reliable watertight joint. In larger bore pipes (> 32mm) pre-fabricated socket fusion and/or in situ modern electro fusion systems can be installed.
- Many installations can be made without accurate pre-measuring, since it is easy to measure and cut in situ.
- Larger pipe diameters (32-225mm) used in major installation projects can be jointed in situ using computerised failsafe electro fusion welding techniques. The equipment required is small, lightweight and portable, requiring only an electricity source for power.

Service benefits

- Polybutylene pipes provide a completely corrosion-free drinking water and heating pipe system.
- Freedom from scale build-up and encrustation in hard water supply areas is guaranteed.
- Resistance to freezing temperatures - the flexibility and elastic properties of Polybutylene ensure that pipes will not burst or be damaged by freeze-ups during cold weather (e.g.: Säntis 2000).
- The low thermal conductivity of Polybutylene means that hot water pipes are cooler to the touch than conventional metal pipes and the incidence of condensation on the pipes is reduced, providing an inherently safer system.

- Due to low thermal conductivity, combined with the fact that thermal expansion is accommodated by the flexibility of the material, Polybutylene (PB-1) piping systems are quiet with no water hammer and minimal system creaking.
- Polybutylene piping systems are electrically non-conductive, providing a safer system with minimum earthing requirements.
- Polybutylene pipes can be installed as a conduit 'pipe in pipe' system through concrete floors and walls making the replacement of installed pipes, an easy matter due to the flexibility of Polybutylene pipe.

Service Sustainability

- Polybutylene pipe applications installed in Europe for underfloor heating (since the early 1970s) and district heating (since the early 1980s) are still operating successfully.
- Polybutylene pipes were installed in the Vienna Geothermal Project in 1974, replacing metal pipes which proved unsuitable due to rapid corrosion and operated until 2010 when an updated system was installed. The Geothermal project utilises very aggressive geothermal water as the heating medium. The Polybutylene piping system ran continuously for 36 years at a constant temperature of 54°C and a pressure of 10 bar.

"Since these first successful installations, advances in both material technology and production processes, combined with the introduction of stringent standards protocols, has furthered the performance and reliability of Polybutylene piping systems. International standards protocols now specify a minimum performance for Polybutylene hot water pipes of 70°C, 10 bar pressure, for 50 years."

Internal Pressure Resistance

- ISO 12230 standards, which present the effect of time and temperature on the expected strength of materials, cover both PB-H and PB-R. Parallel standards to ISO 12230 exist for PE-X (ISO 10146), PP-H, PP-R and PP-B and PP-RCT (ISO 3213) and PE-RT (ISO 24033). These standards provide the basic data for the four respective piping systems standards, namely ISO 15876 for Polybutylene, ISO 15875 for PE-X, ISO 22391 for PE-RT and, ISO 3213 and ISO 15874 for the four polypropylene products PP-H, PP-B, PP-R and PP-RCT. After 10 years' exposure to continuously applied stress, Polybutylene retains 40% more strength than PE-X and almost double that of PP-R and PE-RT type I.

Environmental Impact

- A material's environmental impact in areas including landscape scarring, emissions into the atmosphere, soil and water; and recycling potential, is assessed in 'cradle to grave' studies. The Technical University of Berlin delivered such a study on various drinking water pipe systems, including galvanised steel, copper, and plastics: cross-linked PE-X, PB-1, PP-R, and PVC-C. Polybutylene was classed as 'environmentally friendly' – consuming less energy during manufacture, conversion, installation and use than its competitors. In addition, Polybutylene is recyclable.

FAQ - Frequently Asked Questions

The ten most frequently asked questions to PBPSA and our answers are presented below.

1. **How long have pipe and fitting products made from Polybutylene been used in plumbing applications?**
   Polybutylene has been successfully used for over 40 years in heating pipe applications and for over 25 years in potable water applications.

2. **Is Polybutene-1 the same product as Polybutylene?**
   Yes, Polybutene-1 is often referred to as PB, PB-1 or Polybutylene. Polybutene-1, however, is chemically a more accurate way of describing the raw material. The name Polybutylene was commonly used in the United States, but in Europe some confusion arose with another material called Polyisobutylene, which also was often referred to as Polybutylene. Polyisobutylene is in fact used in the manufacture of chewing gum! Consequently it was decided to use the more chemically accurate name of Polybutene-1.

3. **If Polybutylene is not new, why did it take this long to be widely used in piping installations?**
   Although Polybutylene has been successfully utilised for pressure piping applications since the early 1970s the availability of raw material was limited to one 30,000 tonne/annum plant in the United States and a small production capacity in Japan. In 2003, a 45,000 tonne plant was commissioned in The Netherlands which was later debottlenecked to approx. 65,000 tonnes output.

4. **How quickly is the Polybutylene pipe and fittings market growing?**
   At PBPSA, we feel it is only a matter of time before thermoplastic products replace traditional materials like copper and steel in the majority of heating and plumbing pipe applications. The process is evolutionary – copper replaced lead in the 1950s, and now plastic materials are providing viable alternatives to copper. This evolution is taking place at different rates in different countries. In Switzerland, the penetration of plastics is approaching 80%, whereas in France it is less than 20%, and taking Europe as a whole, 50% of the market is still available for substitution, with Polybutylene recognised as technically, the preferred material of choice. Our growth expectations for the Polybutylene pipe and fittings market are therefore high.

5. **Is it true that in the mid-90s, there was a class action lawsuit for piping failures in North America?**
   Yes, the defendant group was forced to spend a great deal of money defending itself against claims alleging defects in "Polybutylene plumbing systems." The complaints, to the extent that they were valid at all, centred almost entirely around products made from plastics other than Polybutylene, produced by other raw material suppliers for the manufacture of pipe fittings. These companies were co-defendants in this litigation. No such experiences of failure have occurred in the almost 50 years that Polybutylene plumbing products have been used in Europe and Asia. The PBPSA believes that properly manufactured and installed pipe and fittings made from Polybutylene pipe grades will meet all national and international standards and are technically the best choice for plumbing products. Nevertheless, in view of the outcome of the US litigation process, PBPSA members have decided not to sell their Polybutylene piping systems products into North America

6. How easy is it to install Polybutylene plumbing systems?

In some markets, Polybutylene piping is known as 'the plumber's flexible friend'. Its flexibility combined with excellent pressure resistance at high temperatures make it very easy to work with. This, together with the development of new jointing techniques applicable to Polybutylene products and specialised piping systems, provides distinct installation advantages over traditional materials.

7. Are Polybutylene piping systems as hygienic as traditional metal products?

We would argue that Polybutylene systems are hygienically superior to traditional metal products. Corrosion in metal pipes releases the chemical products of corrosion into the water supply. Polybutylene does not corrode. No fluxes, greases or solder are used when installing Polybutylene systems. The additives, such as antioxidants and pigments used in the manufacture of Polybutylene pipe grade material, are approved for use in contact with foodstuffs. Polybutylene piping systems therefore have excellent hygienic properties and are suitable for the transport of drinking water.

8. Where can I get more information about the comparative cost of Polybutylene piping systems?

Polybutylene piping systems are competitively priced and should provide economies for the installer in terms of ease of installation and labour costs. For specific information however, it will be necessary to contact the manufacturers of the various systems. Visit the PBPSA website Contact page, where you will be able to access any of the PBPSA members' sites to obtain assistance with enquiries on cost and installation practice.

9. I've been using copper pipe and fittings all my life. Why should I change?

Sometimes it is difficult to recognise the benefits of change. There is no doubt that copper plumbing was the material of choice for several decades. Plumbers in the 1950s were loath to change from sweating lead joints; however we are now in the era of plastics, which are versatile materials and offer new solutions and advantages in many fields. The choice is yours - but the state-of-the-art and technology advancements are firmly with plastics systems – don't be left out in the cold!

How do Polybutylene piping systems deliver quality jointing?

In the European and Asian markets for Polybutylene, the combination of pipe and fittings to produce a sustainable linkage is considered of paramount importance for the long-life reliability and performance of piping systems.

It appears that in the United States during the 1980's and 1990's the same stringent emphasis was not placed on the combined compatibility and performance of pipe and fittings as it was elsewhere.

Shown below are some examples of the types of fittings, made from materials other than Polybutylene, and used in Noth America which were subject to many of the legal complaints lodged against so-called "Polybutylene plumbing systems."

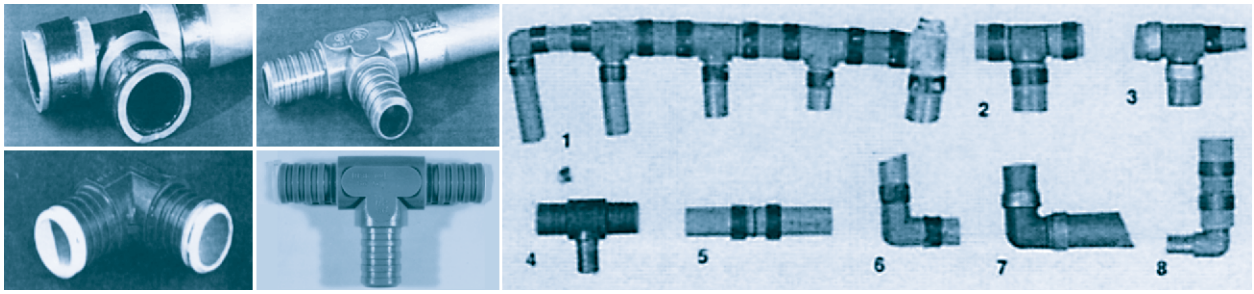

Incompatible and diverse materials and jointing methods attributed in the US legal action to "Polybutylene plumbing systems"

In contrast to the US examples are typical examples (below) of the types of fittings developed over many years which are an integral part of the success of today's Polybutylene piping systems in the European and Asian markets.

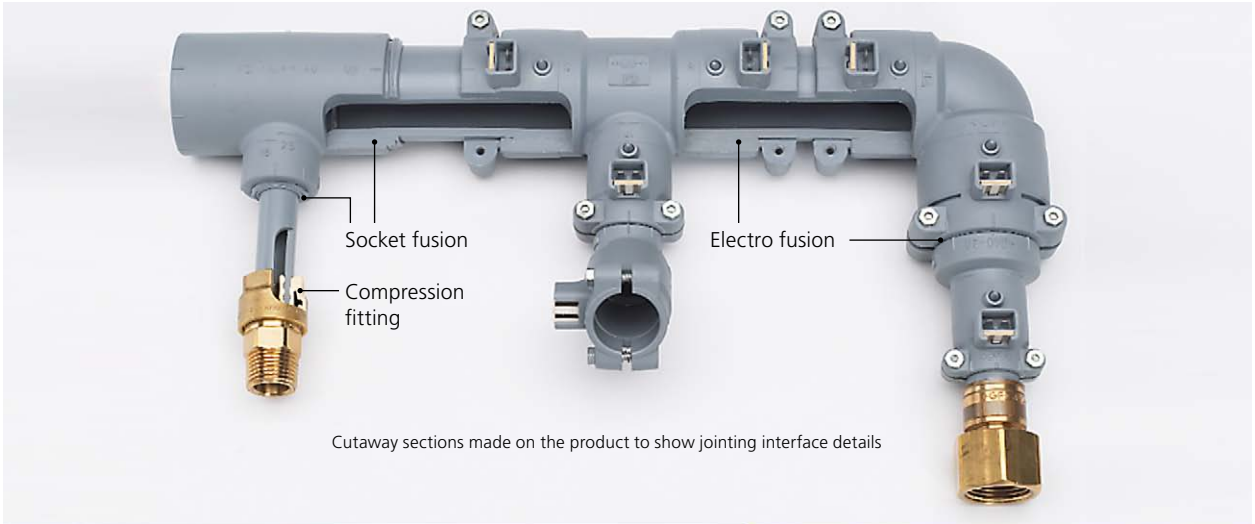

Cutaway sections made on the product to show jointing interface details

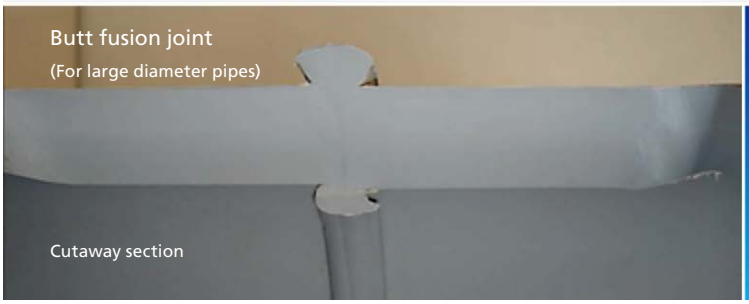

What are the applications for Polybutylene piping systems?

Piping systems made from Polybutylene demonstrate exceptional performance in a variety of demanding long-term applications and have become a vital part of modern energy-efficient and ecologically acceptable building technology resulting in a booming growth rate for Polybutylene piping systems in recent years. Applications include:

Large Scale Projects

Plumbing

District Energy

Heating and Cooling

Where have Polybutylene piping systems been successfully used?

The development and applicational scope of Polybutylene piping systems continues to expand. New fittings and installation techniques, as well as increased sophistication in applications, demonstrate the benefits and advantages of this versatile material. More and more, Polybutylene piping systems are being specified in major projects worldwide, including the examples shown below.

The British Museum, UK

Canary Wharf - Wintergarden, UK

Monarch of the Seas

Royal Albert Hall, UK

Säntis 2000 Expansion, CH

The Imperial War Museum North, UK

Tschuggen Mountain Oasis - Arosa, CH

Hotel Les Trois - Basel, CH

Davos Hospital - Davos, CH

District Heating - Almere, NL

Ulster Universtity - Colerain, IE

Thermal Spa Rogner-Bad - Blumau, AT

Assessment of Polybutylene Plumbing Installation after 18 Years of Service

Dale B. Edwards and Donald E. Duvall
Engineering Systems Inc., Aurora, IL 60504

INTRODUCTION

Engineering Systems Inc. (ESI) was retained by a property owner to evaluate the condition of the polybutylene (PB) plumbing system in a multi-unit apartment complex. The owner was doing a general rehabilitation project on the apartment units and desired to know the condition of the behind-the-wall PB plumbing pipe. The analysis included a site inspection of the plumbing system in the complex and laboratory testing of pipe samples removed from the apartments.

The on-site inspection of the plumbing system was conducted in November, 2011. At that time, PB pipe samples were selected and removed for laboratory testing. The hot water pipe closest to the water heater connection was selected from several apartments for testing, as well as a few cold water pipes from the same units. The laboratory testing of the PB pipe samples included a visual and microscopic inspection of the samples, dimensional measurements, quick burst testing, oxidation induction time testing, long-term hydrostatic pressure testing, and Fourier Transfer Infrared Spectroscopy (FTIR).

SITE INSPECTION DETAILS

During the site inspection, the plumbing connections near the water heater were examined in sixteen units that were undergoing rehabilitation. Table 1 lists the units that were inspected and the samples that were taken. The test samples included four different production date codes for Qest PB pipe and one date code for Vanguard PB pipe. The PB piping entered each apartment building under the concrete slab from a valve box in front of each building. As part of the rehabilitation project, the drywall had been removed in the mechanical room that housed the furnace and water heater. The typical layout of the PB piping is shown in Figures 1 and 2 for one of the first floor apartments and upstairs apartments, respectively.

In general the installation of the PB pipe in the apartment complex was excellent. The tubing was properly secured to studs and was not excessively bent. Approximately 18 inches of copper pipe was present between each water heater and the beginning of the PB hot water piping. The system utilized wrought copper fittings and either Qest or Vanguard ¾" PB tubing. The crimp ring diameters were within specification as measured with a Qest "Go-No Go" gage for PB piping with copper crimp rings. The crimp diameters were at the high end of the range (0.945" to 0.960"), which is common for crimped connections using wrought copper fittings. The crimp rings from all of the samples that were removed for testing were within the proper diameter range. There were no problems with the installation of the PB piping that were noted during the inspection. The chlorine level was measured at a sink faucet in the office at the site, using the DPD (N,N diethyl-p-phenylenediamine) method and Aquacheck chlorine strips. The free chlorine measurement for the cold water was approximately zero with both methods, while the total combined chlorine was approximately 3 ppm.

TESTING OF PB SAMPLES

A total of 17 pipe samples from fifteen of the sixteen units that were inspected (no samples were taken from Bldg. A, Unit #1). The testing included dimensional analysis, micro-Fourier Transform infrared spectroscopy (micro-FTIR), oxidation induction time (OIT), short-term burst pressure and long-term hydrostatic stress-rupture tests.

Dimensions

The dimensions of the samples were measured per ASTM D 2122 [1], for average outside diameter (O.D.) and minimum wall thickness. The wall thickness was measured at eight locations around the circumference of the pipe, noting the average and minimum value. The average O.D. was measured using a circumferential wrap tape. The measured dimensions of pipe from each of the five date codes are shown in Table 2. The pipe outside diameters were still all within that specified in ASTM D 3309 [2]. The wall thicknesses generally still met the 0.080-inch minimum wall except for a few pipes where the measured minimum wall was 0.078 to 0.079. This is not unusual for pipe that has been in service for 18 years at elevated temperature, causing some creep of the material. It is apparent from these dimensional measurements that the pipes all originally met the dimensional requirements for new pipe in the ASTM D 3309 standard.

Table 1. Units Inspected and PB Samples Taken.

Building #	Unit #	Samples Taken
A	6	Vanguard (8-10-93) hot water pipe
A	5	Vanguard (8-10-93) hot water pipe
A	4	Vanguard (8-10-93) hot water pipe
A	3	Vanguard (8-10-93) hot water pipe
A	2	Vanguard (8-10-93) hot water pipe
A	1	None
B	2	Qest (2-1-93) hot water pipe
B	1	Qest (apparently 2-1-93) hot water pipe
C	8	None – This unit had been changed out to PEX due to a fire.
C	7	Unit above unit where fire had occurred Qest (11-30-92) hot water pipe Qest (12-1-92) cold water pipe Qest (11-30-92) cold water pipe
C	6	Qest (11-30-92) hot water pipe
C	5	Qest (2-1-93) hot water pipe
C	4	Qest (12-2-92) hot water pipe
C (removed by owner prior to inspection)	3	Qest (12-1-92) hot water pipe Qest (12-2-92) cold water pipe
C	2	Qest (12-1-92) hot water pipe
C	1	Qest (11-30-92) hot water pipe

Table 2. Dimensions of ¾" PB Tubing Samples

Sample Designation	Average O.D., in.	Avg. Minimum Wall, in.
Qest 11-30-92	0.876	0.080 (avg. 0.081)
Qest 12-01-92	0.877	0.078 – 0.079 (avg. 0.080)
Qest 12-02-92	0.878	0.082 (avg. 0.083)
Qest 02-01-93	0.878	0.080 (avg. 0.081)
Vanguard 08-10-93	0.878	0.078 – 0.079 (avg. 0.080)
ASTM D 3309 Requirement	0.875 ± 0.004	0.080 + 0.010

Micro-FTIR – Check for Oxidation

Seventeen PB pipe samples that were removed from the site were analyzed by micro-FTIR spectroscopy for extent and depth of oxidation at the inner wall of the PB tubing. Most of the samples chosen were from the hot water side nearest to the water heater, areas that represent the most aggressive in-service environment.

Oxidation of polyolefins such as PB results in the formation of carbonyl groups onto the PB molecules [3]. These groups have characteristic infrared absorption frequencies. Among these groups, the strongest absorption peak is observed at about 1715 to 1720 cm^{-1}. Weaker peaks are observed at 1735 and 1775 cm^{-1}. The stabilizer compounded into the PB has a small carbonyl peak at 1740 cm^{-1}. When oxidation occurs, a peak around 1715 cm^{-1} is formed, which progressively increases in intensity as the degree of oxidation increases. The carbonyl index is defined as the ratio of this carbonyl absorbance to that of the polymer backbone absorption band at 1465 cm^{-1}. The use of this ratio compensates for any differences in sample thickness and serves as an internal standard.

In the present study, the carbonyl index was profiled through the thickness of the PB tubing in order to determine the extent and depth of the oxidation, if it existed. This profiling is possible with a Micro-FTIR instrument that allows one to focus the infrared beam at a precise location on the sample. The analysis was conducted using a Perkin Elmer Spectrum 100 FTIR instrument with a Multi-Scope micro-FTIR accessory. The samples consisted of microtomed cross sections of the tubing wall. The infrared spectra were recorded in 0.03 mm increments (~0.0012 inches), using an aperture of approximately 0.3 mm x 0.03 mm. The profiling was continued inward from the inner surface of the tubing until no absorbance at 1715 cm^{-1} was detected. The carbonyl index was also measured at the core of the tubing for comparison with the inner surface measurements.

Table 3 shows the carbonyl index measurements obtained on the PB pipe samples. There was very little indication of any oxidation in the samples tested. Carbonyl indices of less than approximately 0.05 indicate insignificant

oxidation of the PB material. Any minimal oxidation that was detected in the samples was less than one thousandth of an inch in depth. In order for oxidation to negatively affect the PB pipes, the carbonyl index should be at least 0.1 and the depth of oxidation at least two thousandths of inch deep. None of the pipes analyzed show anything but superficial oxidation that will not negatively affect the long-term performance of the pipe.

Table 3. Carbonyl Index (C.I.) Measurements on PB Pipe Samples.

Sample Building-Unit	C.I. 0 to 0.0012 in.	C.I. 0.0012 to 0.0024 in.	C.I. 0.0024 to 0.0036 in.	C.I. Core
B-1-Hot	0.018	0.009	--	0.004
B-2-Hot	N.D.*	N.D.*	--	0.009 (1740 cm^{-1})
A-2-Hot	0.017	0.006	--	0.005
A-3-Hot	0.011	0.0001	--	0.007 (1740 cm^{-1})
A-4-Hot	0.007	0.008	--	N.D.
A-5-Hot	0.023	0.004	--	0.009 (1740 cm^{-1})
A-6-Hot	0.0002	0.0005	--	0.0149 (1740 cm^{-1})
C-1-Hot	0.058	0.042	--	0.012 (1740 cm-1)
C-2-Hot	0.033	0.013	--	0.005 (1740 cm^{-1})
C-3-Hot	0.036	0.006	--	0.011 (1740 cm^{-1})
C-3-Cold	0.009	0.007 (1740 cm^{-1})	--	0.007 (1740 cm^{-1})
C-4-Hot	0.020	0.002 (1740 cm^{-1})	--	0.013 (1740 cm^{-1})
C-5-Hot	0.014	0.006	--	0.007 (1740 cm^{-1})
C-6-Hot	0.019	0.010 (1740 cm^{-1})	--	0.011 (1740 cm^{-1})
C-6-Cold	0.070	0.009	0.007	0.009 (1740 cm^{-1})
C-7-Hot	0.051	0.016	0.014 (1740 cm^{-1})	0.003 (1740 cm^{-1})
C-7-Cold	0.020	0.015	0.007	0.017 (1740 cm^{-1})

*N.D. = Not Detected

Oxidation Induction Time (OIT)

The oxidation induction time (OIT) was measured on ten of the pipe samples at 200°C per ASTM D3895 [4]. This test is a relative measure of the amount of antioxidant still remaining in the pipe after extrusion and service. OIT was measured at the core of the tubing samples in order to ascertain whether residual levels of anti-oxidant still exist in the samples. The core OIT's are shown in Table 4.

Table 4. Core OIT Measurements on PB Samples at 200°C

Sample (Building-Unit)	Core OIT at 200°C, minutes
B-2-Hot	19.1
A-3-Hot	35.6
A-5-Hot	30.8
C-1-Hot	30.4
C-2-Hot	45.0
C-3-Cold	55.1
C-4-Hot	54.2
C-6-Hot	24.5
C-7-Cold	54.0
C-7-Hot	8.8

OIT testing is significant because it demonstrates that there is still antioxidant present after more than 18 years of service. This is consistent with observations made in some of the FTIR spectra of the presence of antioxidant at the core and the inside surface (at 1740 cm^{-1}). The lower value for the hot water pipe from Bldg. C - 7 is likely due to the fact that this unit was above a unit that had a fire and the pipe sample had smoke damage on the outer surface of the pipe and likely was exposed to higher temperatures. The 20 to 50 minute values indicate that a substantial portion of the antioxidant remains in the pipes to protect them from oxidation.

Quick Burst Tests

Quick burst tests were performed on several of the PB pipe samples. These tests were performed according to ASTM D1599 [5]. This test method determines the maximum pressure that will fail a plastic pipe when the pressure is ramped from zero to the burst pressure within 60 to 70 seconds. The minimum requirements for PB pipe and fitting assemblies are 440 psi at 23°C and 250 psig at 82°C [2]. All of the PB pipe samples tested far exceeded these minimum requirements at both temperatures, as shown in Table 5, demonstrating that the 18-year-old pipe still meets the ASTM burst requirement for new, unused PB pipe.

Table 5. Quick Burst Test Results on PB pipe Samples

Sample (Building-Unit)	Test Temperature, °C	Burst Pressure, psig
C-3-H-1	23.0	674
C-1-H-1	23.0	692
C-2-H-1	23.0	685
C-4-H-1	23.0	715
B-1-H-1	23.0	712
A-2-H-1	23.0	641
ASTM D 3039 Minimum Requirement	23.0	440
C-1-H-2	82.2	309
C-6-H-1	82.2	310
A-2-H-2	82.2	318
ASTM D 3039 Minimum Requirement	82.2	250

Sustained Pressure Tests

Hydrostatic stress rupture tests are being performed on samples of the PB pipe removed from the apartment complex. This testing is above and beyond the required 1000-hour sustained pressure tests called out in ASTM D3309 for the pipe. Testing was initiated on the PB pipe samples following the protocol in ASTM D 2837 [6]. In this case testing was initiated to obtain an E-2 data set (per Plastics Pipe Institute TR-3 [7]) to demonstrate how the 18-year-old PB pipe compares to the stress rupture data for new, unused pipe.

The E-2 data set includes a minimum of 10 data points with failure times ranging from 10 to more than 2000 hours. This data was then analyzed according to the procedure in ASTM D2837 to estimate the hydrostatic design basis (HDB) for the PB samples. The data were plotted on a graph with 107,000 hours of long term hydrostatic test data obtained on new, unused PB pipe that was reported by Springborn Laboratories in 1995 [8] (Figure 3). This testing continued for more than 3000 hours and established that the long-term sustained pressure performance of the pipe is comparable to or better than published data on new, unused PB pipes. The pipes have surpassed the expected failure times at the test hoop stresses, as shown in Table 6 below.

Table 6. Hydrostatic Pressure Test Results

Sample	Test Pressure, psig	Hoop Stress, psi	Test or Failure Time	Remarks
2921-6-H-2	475	2334	3051.2	On Test
2921-5-H-1	475	2334	3051.2	On Test
2905-6-H-1	475	2334	3051.2	On Test
2905-3-H-2	490	2438	3051.2	On Test
2905-4-H-1	490	2438	3051.2	On Test
2905-6-H-2	490	2441	3051.2	On Test
2921-2-H-2	507	2525	3053	On Test
2921-5-H-2	507	2525	3053	On Test
2905-3-H-1	507	2525	3053	On Test
2921-7-H-1	525	2648	935.0	On Test
2905-4-H-2	550	2778	35	Failure between 21 and 50 hours
2921-4-H-2	560	2711	53	Failed

CONCLUSIONS

Based on the site inspection, examination and testing of PB samples that were removed from the apartments (detailed above) and experience in plastic pipe materials performance, the PB piping system in this apartment complex appeared to be in excellent condition and had not degraded to any significant extent during its 18 years of service. The pipe samples appear to have met the ASTM requirements for dimensions and burst strength. It is anticipated that the pipe will also perform as well as new pipe in the long-term pressure tests that are under way. There is no evidence of any significant oxidation of the pipe and OIT measurements demonstrate that the PB pipe is still well protected by antioxidants.

The PB compound used in the Qest and Vanguard piping at the site was PB4137, a compound manufactured by Shell Chemical that had approximately twice as much stabilizer as the earlier PB compounds that were used in PB piping, and thus, should have approximately twice the life expectancy. Data from Shell suggests that the

lifetime of PB in a plumbing system at 1 ppm free chlorine (higher than that measured on-site) should have a projected lifetime of 88 years, if the daily hot water consumption is 6 hours per day [9]. According to a Stevens Institute of Technology report, the average hot water usage in single-family homes in the U.S. is less than 1 hour per day. The lifetime calculation goes up to 170 years if the hot water usage is 2 hours per day. The OIT and FTIR measurements on these PB pipe samples confirm that the pipe has not degraded as a result of their 18 years in service. In addition to the good properties exhibited by the pipe, the installation of the system was very good. The pipes were properly restrained and did not appear to be severely bent or stressed. The piping is not routed through any attic spaces either, which eliminates any additional heating from the environment. The crimping of the fittings was also according to manufacturer's specifications in terms of outer diameter and position.

The PB plumbing system should continue to perform well into the future. It is very hard to predict when and if a plumbing system will develop a leak, since there are many potential causes of leaks. This plumbing system should continue to perform as well or better than any plumbing system that has been in service for 18 years. We have seen no evidence of material defects or degradation that should shorten the lifetime of this system. Excessive stress on PB pipe can lead to failure in some cases. We did not observe any evidence that excessive stress was applied to the PB piping in this system. In fact, as stated above, the installation was very good. However, we cannot rule out the fact that there may be a few pipes that are highly stressed and could possibly leak at some time in the future.

References

1. ASTM D 2122-98 (Reapproved 2010), "Standard Test Method for Determining Dimensions of Thermoplastic Pipe and Fittings," *2010 Annual Book of ASTM Standards, Volume 08.04,* ASTM International, West Conshohocken, PA.
2. ASTM D 3309-96a, "Standard Specification for Polybutylene (PB) Plastic Hot- and old-Water Distribution Systems", *2010 Annual Book of ASTM Standards, Volume 08.04,* ASTM International, West Conshohocken, PA.
3. K. Karlsson, G.D. Smith and U.W. Gedde, *Polym. Eng. & Sci.* **32**(10), 649 (1992).
4. ASTM D3895-07, "Standard Test Method for Oxidative-Induction Time of Polyolefins by Differential Scanning Calorimetry," *2011 Annual Book of ASTM Standards, Volume 08.02,* ASTM International, West Conshohocken, PA.
5. ASTM D1599-11, "Standard Test Method for Resistance to Short-Time Hydraulic Pressure of Plastic Pipe, Tubing and Fittings," *2010 Annual Book of ASTM Standards, Volume 08.04,* ASTM International, West Conshohocken, PA.
6. ASTM D 2837-11, "Standard Test Method for Obtaining Hydrostatic Design Basis for Thermoplastic Pipe Materials or Pressure Design Basis for Thermoplastic Pipe Products," *2010 Annual Book of ASTM Standards, Volume 08.04,* ASTM International, West Conshohocken, PA.
7. PPI TR3 / 2010 / HDB / HDS / PDB / SDB / MRS Policies, *Policies and Procedures for Developing Hydrostatic Design Basis (HDB), Hydrostatic Design Stresses (HDS), Pressure Design Basis (PDB), Strength Design Basis (SDB), and Minimum Required Strength (MRS) Ratings for Thermoplastic Piping Materials or Pipe,* Plastics Pipe Institute, Irving, TX (2010).
8. Springborn Laboratories Project 2621.30 Test Report (107,000 hour level), to Shell Oil Company, March 21, 1995.
9. Shell Oil Company, private communication.

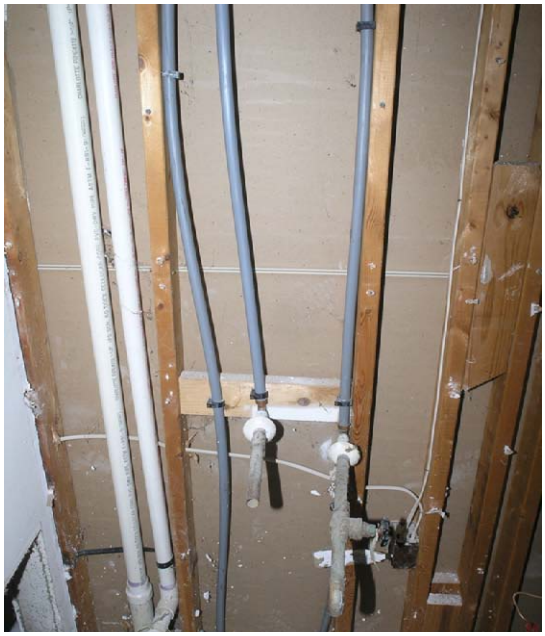

Figure 1. Typical layout of PB piping in a first floor apartment.

Figure 2. Typical layout of PB piping in a second floor apartment.

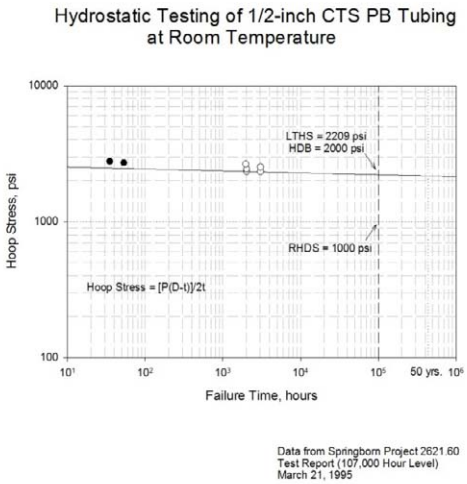

Figure 3. Hydrostatic pressure test results (symbols) superimposed on results of testing of new, unused PB pipe (line).

PBPSA | Polybutene Piping Systems Association

The Polybutene Piping Systems Association (PBPSA) is an international association of market leading companies committed to the use of the thermoplastic material, Polybutene-1 (PB-1) for the manufacture of piping systems. Also known as polybutylene, PB-1 is used worldwide in applications including piping systems for large-scale building projects, district energy networks, heating and cooling, and plumbing installations.

Polybutene Piping Systems Association
Postfach 3377
8021 Zürich
SWITZERLAND
pbpsa@posteo.de
www.pbpsa.com

PBPSA Members

GEORG FISCHER PIPING SYSTEMS — www.gfps.com/com/en.html

HakaGerodur — www.hakagerodur.ch

John Guest — www.johnguest.com

lyondellbasell *Advancing Possible* — www.lyondellbasell.com

NUEVA TERRAIN S.L. — www.nuevaterrain.com

THERMAFLEX ® — www.thermaflex.com